Diagram of the 3 Vdc 1.34w motor

Schéma du moteur 3 Vdc 1,34w

Esquema del motor de 3 Vcc de 1,34w

Esquema del motor de 3 Vcc de 1,34w

C-6042

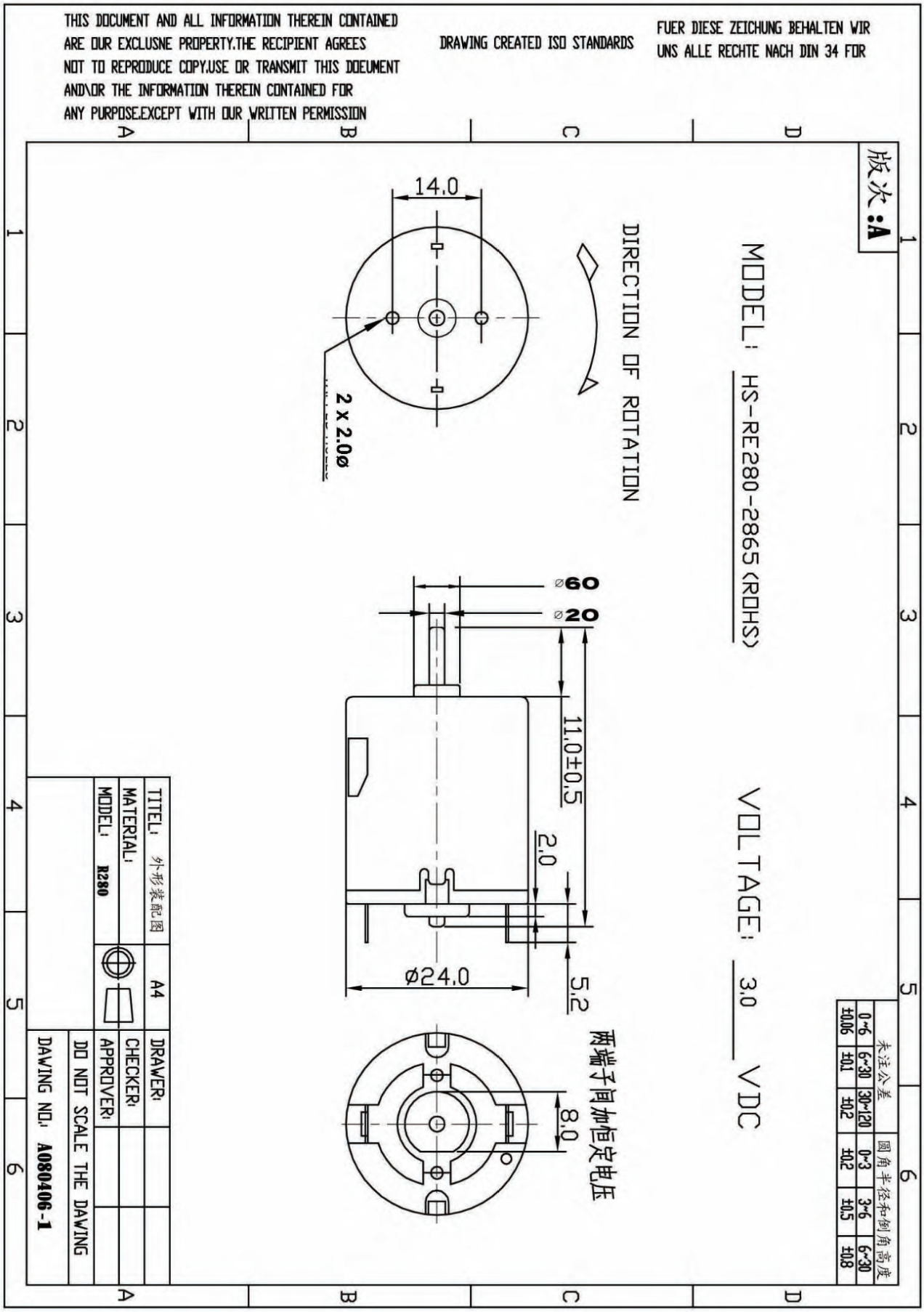
THIS DOCUMENT AND ALL INFORMATION THEREIN CONTAINED ARE OUR EXCLUSNE PROPERTY.THE RECIPIENT AGREES NOT TO REPRODUCE COPY.USE OR TRANSMIT THIS DOEUMENT AND\OR THE INFORMATION THEREIN CONTAINED FOR ANY PURPOSE.EXCEPT WITH OUR WRITTEN PERMISSION
DRAWING CREATED ISO STANDARDS
FUER DIESE ZEICHUNG BEHALTEN WIR UNS ALLE RECHTE NACH DIN 34 FOR
版次 :A
MODEL: HS-RE280-2865(ROHS)
VOLTAGE: 3.0 VDC
DIRECTION OF ROTATION
14.0
2 x 2.0ø
ø60
ø20
11.0±0.5
2.0
5.2
ø24.0
8.0
两端子间加恒定电压
未注公差
0~6 ±0.06
6~30 ±0.1
30~120 ±0.2
圆角半径和倒角高度
0~3 ±0.2
3~6 ±0.5
6~30 ±0.8
TITEL: 外形装配图
MATERIAL:
MODEL: R280
A4
DRAWER:
CHECKER:
APPROVER:
DO NOT SCALE THE DAWING
DAWING NO.: A080406-1

MODEL: HS-RE280 -2865 (ROHS) VOLTAGE: 3.00 VDC

LENGTH OF SHAFT (A): 45.0 mm (±0.1)	FRCNT EXTENSION (B): 11.0mm (±0.5)	NOISE: 60 1/2 dBA / inch(Max)

NO LOAD		LOAD EFFICIENCY(APPROX)					STALL	
SPEED (r.p.m.)	CURRENT (A)	SPEED (r.p.m.)	CURRENT (A)	TORQUE (g.cm)	OUT PUT (W)	EFFICIENCY (%)	CURRENT (A)	TORQUE (g.cm)
9500 ±10%	0.25 MAX.	7790	1.14	19.91	1.58	46.21	5.20 MAX.	110.00 MIN.

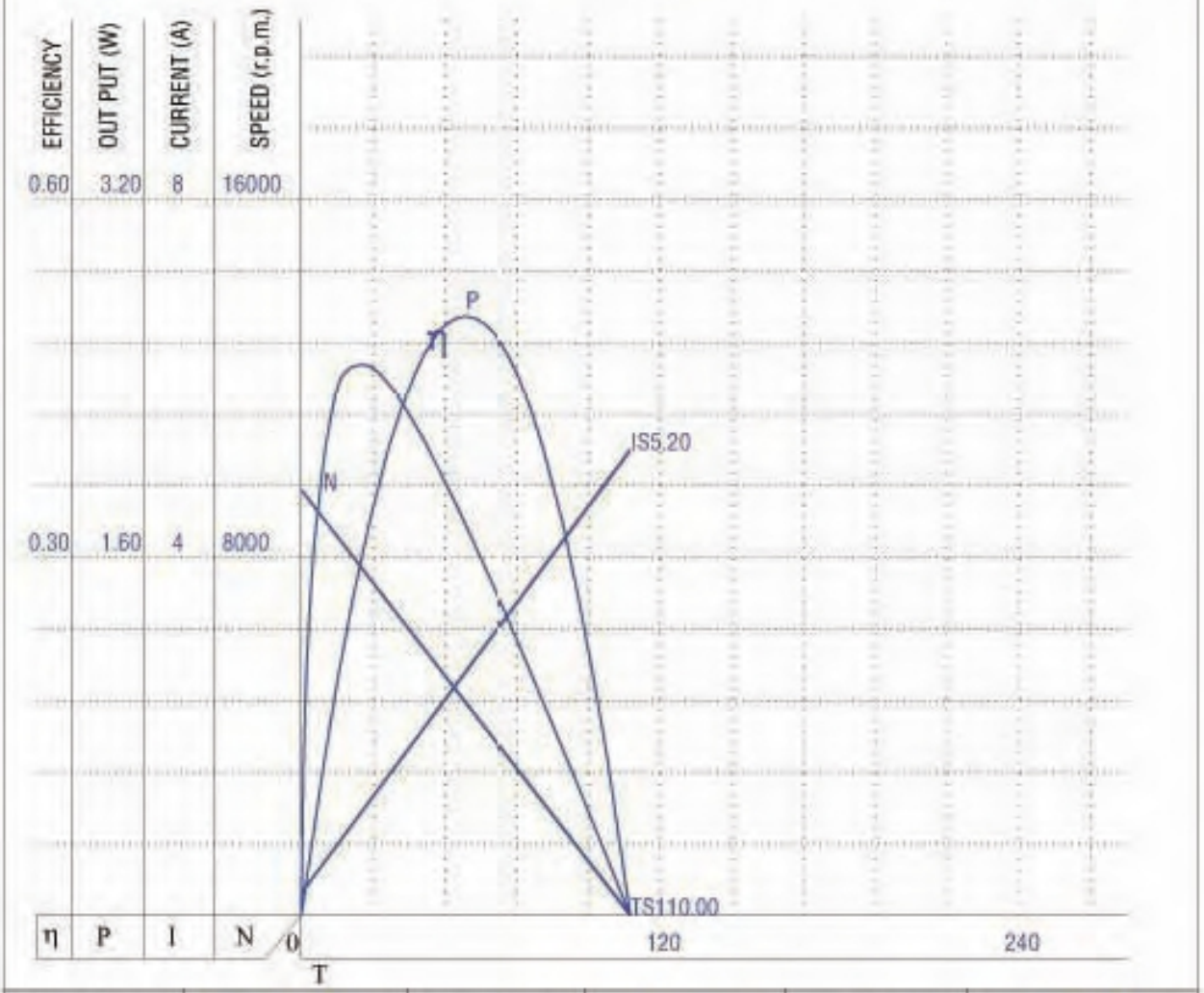

CUSTOMER	A080406-1	REVISION	A	DATE	2008-04-06
DRAWN BY		CHECKED BY		APPROVED BY	